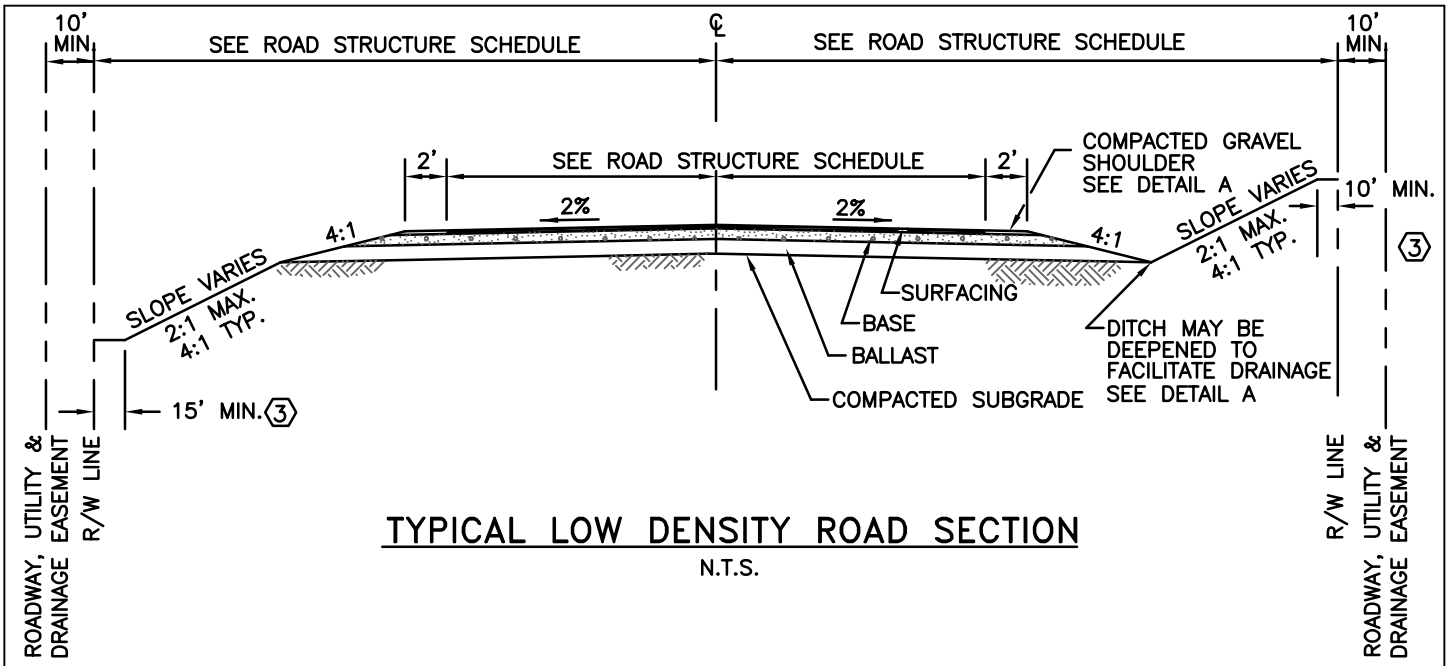

TYPICAL LOW DENSITY ROAD SECTION

N.T.S.

CLASS OF ROAD	BALLAST 4	BASE COURSE 4	PLANT MIX PAVEMENT 4	PAVEMENT WIDTH	RIGHT-OF-WAY WIDTH (FT)
ARTERIAL	12"	4"	4"	34' MIN. 5	90' MIN. 5
COLLECTOR	12"	4"	3"	26' MIN. 5	60' MIN. 5
LOCAL ACCESS	12"	4"	2"	20'-40'TYP. 2	60' MIN. 5

NOTES:

1 ROAD STRUCTURE SECTIONS MAY VARY FOR POOR SOIL CONDITIONS. CHANGES TO THESE SECTION REQUIREMENTS WILL BE BASED ON A GEOTECHNICAL REPORT PREPARED BY A REGISTERED PROFESSIONAL ENGINEER. SEEDING OF ALL DENUDED AREAS WILL BE REQUIRED.

2 LOCAL ACCESS ROADS WIDTH WILL BE PROPOSED BY THE DEVELOPER AND REVIEWED / APPROVED BY THE IHD..

3 IN CUT AND FILL SECTIONS, 10 FEET AT THE TOP OF CUT AND 15 FEET AT TOE OF FILL MAY SERVE AS ROADWAY, UTILITY & DRAINAGE EASEMENT WITH CONCURRENCE OF THE HIGHWAY DISTRICT.

4 DEPTHS ARE MINIMUM COMPACTED DEPTH REQUIREMENTS.

5 OR GREATER AS REQUIRED BY THE IHD, THE URBAN AREA TYPICAL SECTION MAP, R/W MAP AND/OR THE FUNCTIONAL CLASSIFICATION MAP, WHICHEVER IS GREATER.

ROAD STRUCTURE SCHEDULE

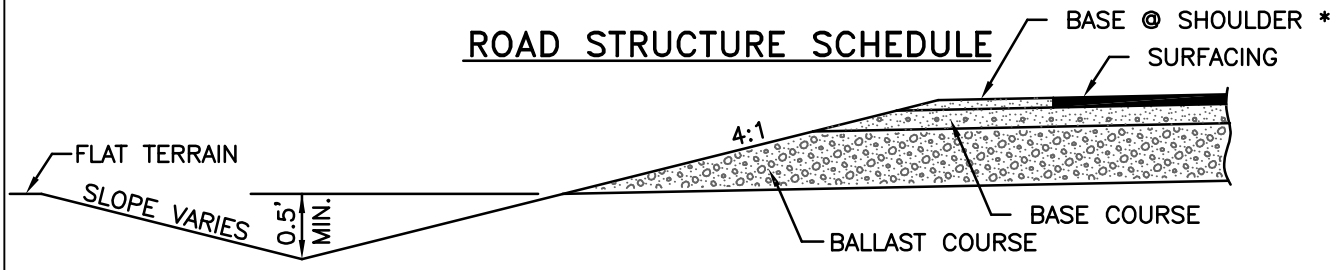

DETAIL A

N.T.S.

* SHOULDER MAY BE PAVED 1.33 FEET WIDE WITH TAPERED DEPTH PLANT MIX ASPHALT.

DATE: JANUARY 2008	LOW DENSITY ROAD SECTION
DESIGNED BY: RJLE	INDEPENDENT HIGHWAY DISTRICT BONNER COUNTY, IDAHO
FILE: SD-1.DWG	
SHEET: SD-1	

MINIMUM STOPPING SIGHT DISTANCES

DESIGN SPEED MPH	20	25	30	35	40	50	60
STOPPING DISTANCE, (S) FEET	115	155	200	250	305	425	570

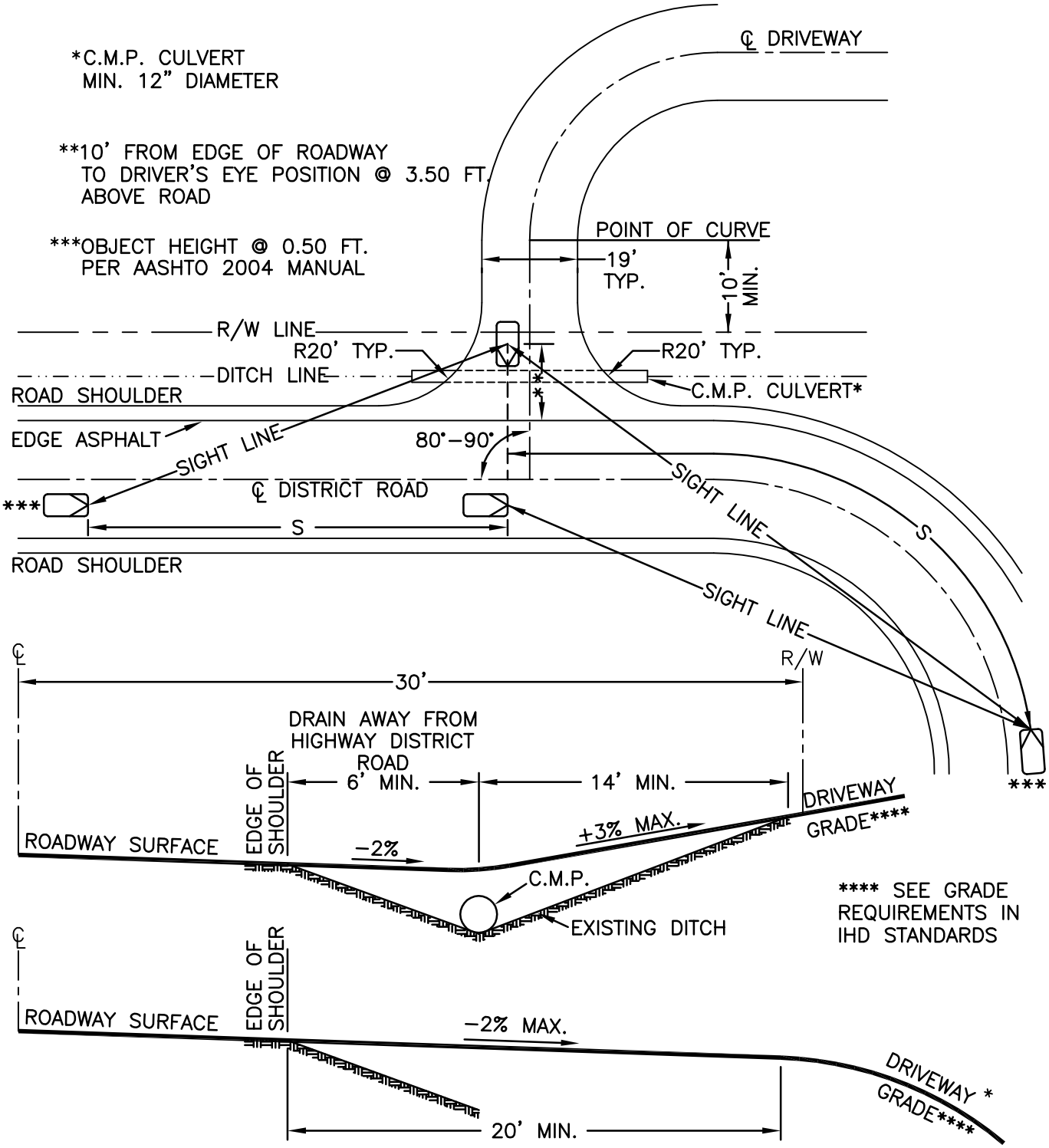

DATE: JANUARY 2008	STANDARD DRIVEWAY LAYOUT
DESIGNED BY: RJLE	INDEPENDENT HIGHWAY DISTRICT BONNER COUNTY, IDAHO
FILE: SD–3.DWG	
SHEET: SD–3	

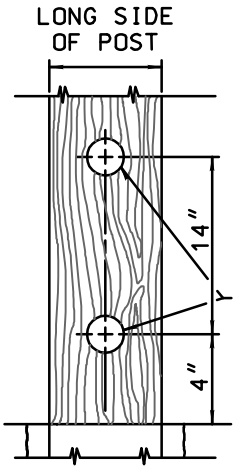

DETAIL "A"

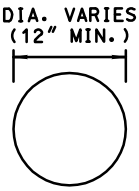

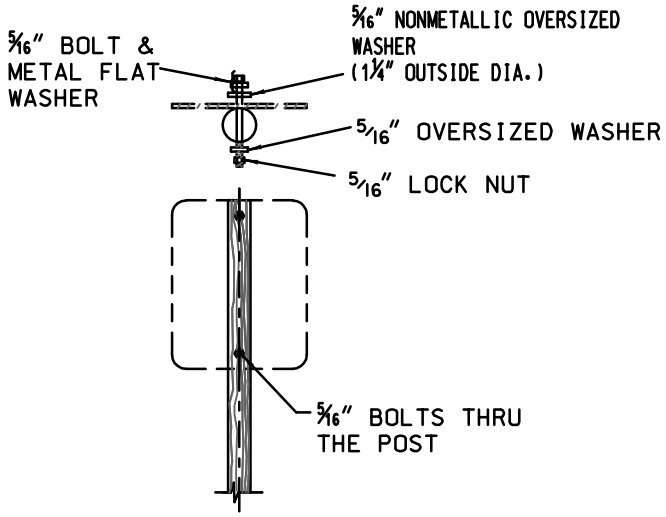

TYPICAL MOUNTING
FOR SIGNS WITHOUT
BRACE ANGLES

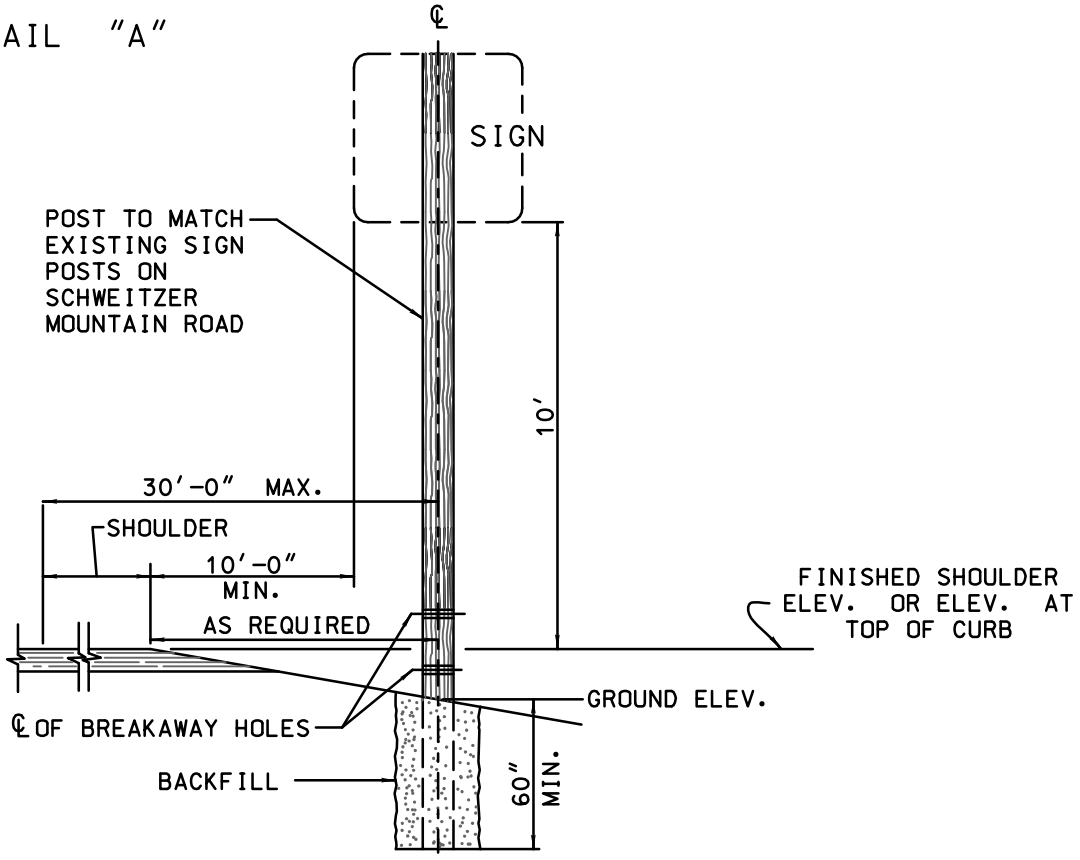

INSTALLATION DETAIL

DATE:	JANUARY 2008	SIGN INSTALLATION
DESIGNED BY:	RJLE	INDEPENDENT HIGHWAY DISTRICT BONNER COUNTY, IDAHO
FILE:	SD-1131.DWG	
SHEET:	SD-1131	

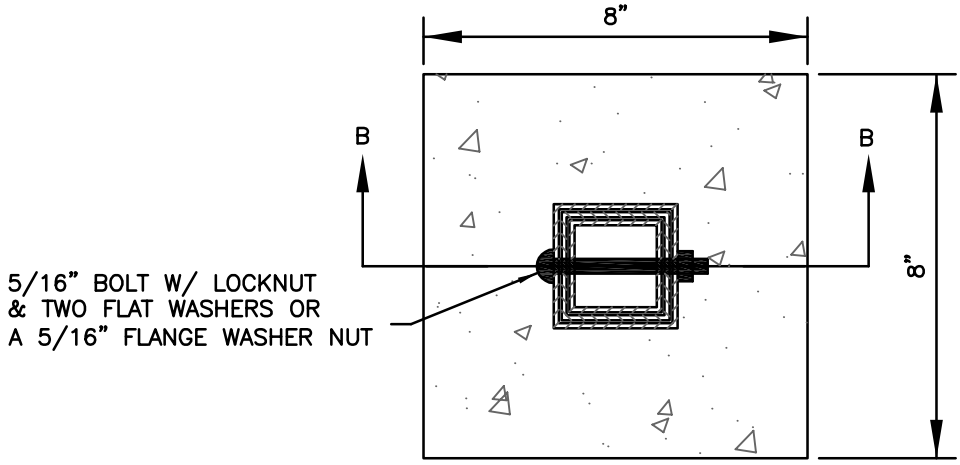

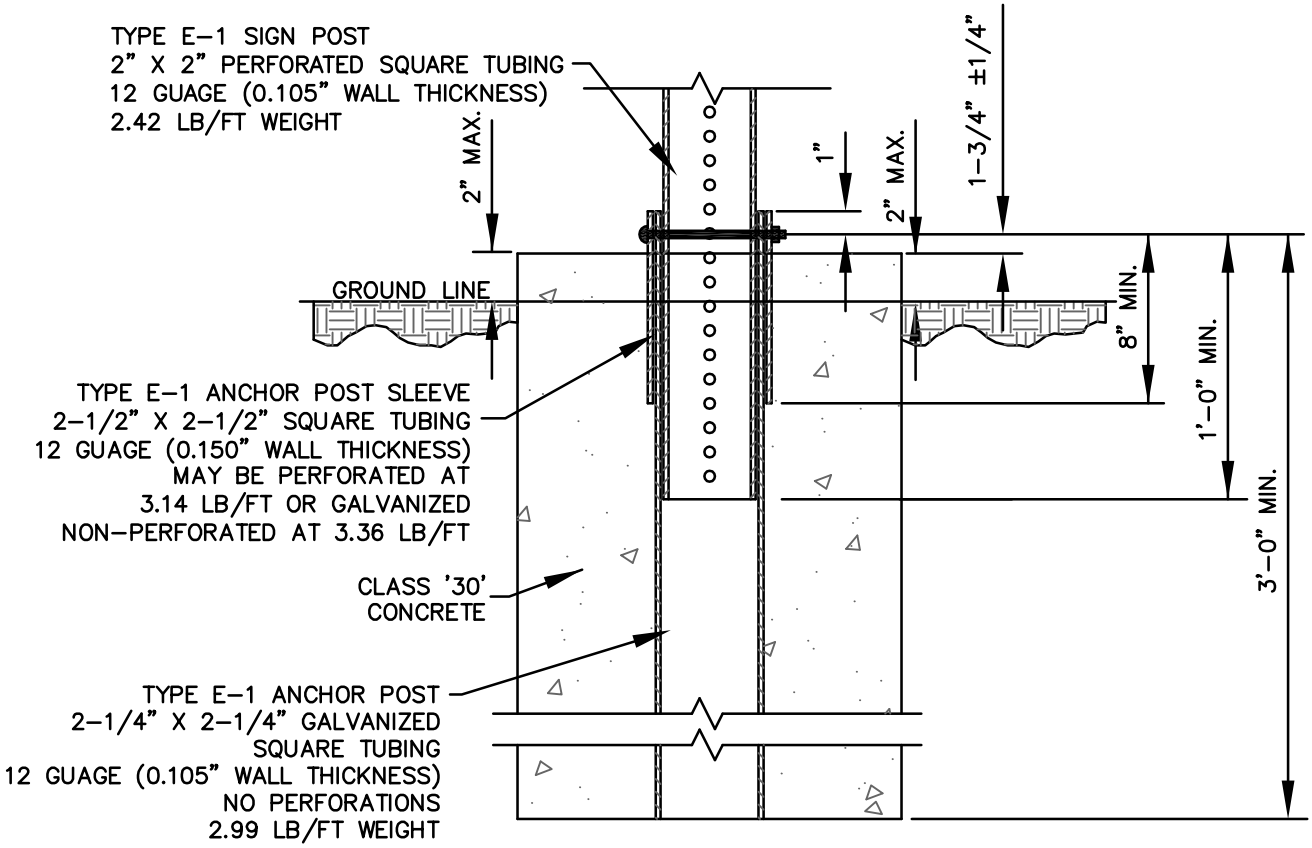

TYPE E-1 SIGN POST

SECTION B-B

NOTE:

1.) TYPE E-1 POST ANCHOR SLEEVES SHALL BE INSTALLED SO THAT THE HOLES WILL ALIGN AND THE TOP IS FLUSH WITH THE SIGN POST ANCHOR.

2.) TYPE E-1 POST ANCHOR SLEEVES SHALL BE INSTALLED SO THAT THE TRAFFIC SIGN (ONCE MOUNTED) SHALL MEET ITS INTENDED INSTALLATION REQUIREMENT.

DATE:	JANUARY 2008	SIGN POST DETAILS
DESIGNED BY:	RJLE	INDEPENDENT HIGHWAY DISTRICT BONNER COUNTY, IDAHO
FILE:	SD-15.DWG	
SHEET:	SD-15	

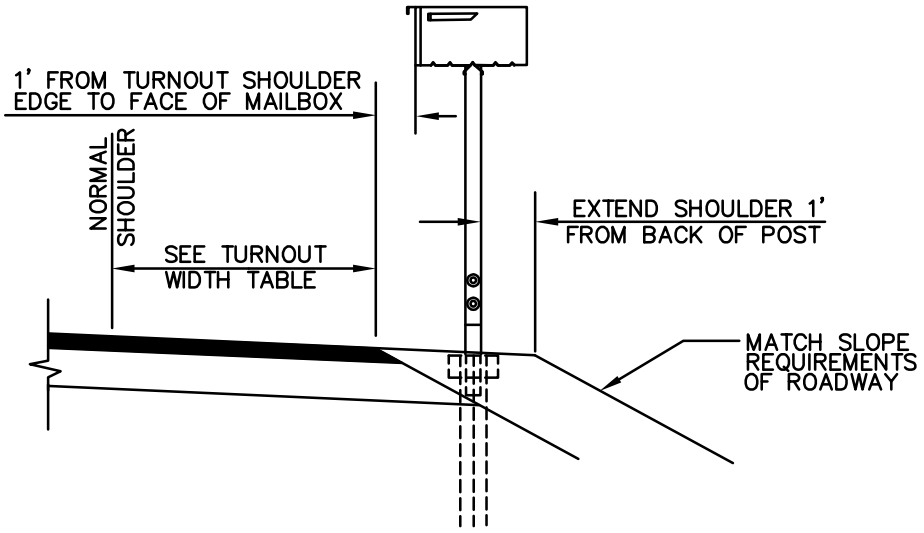

MAILBOX SLOPE TYPICAL

N.T.S.

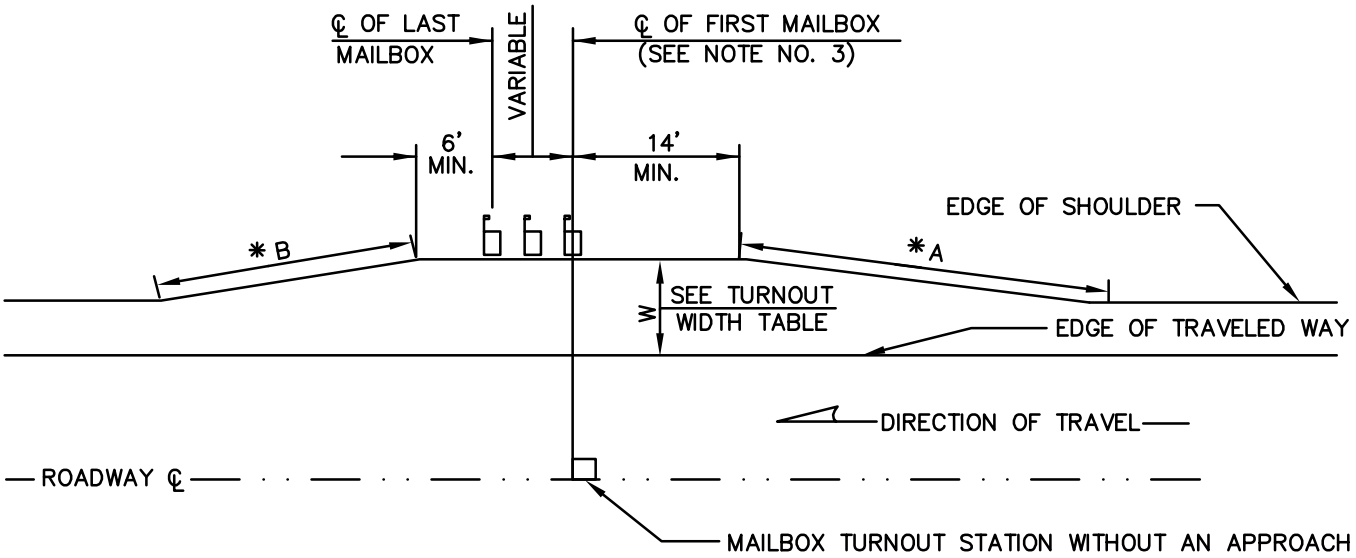

*A = 4:1 and *B + 2.5:1 TAPERS:
FOR ROADS WITH SPEEDS OF 40 MPH OR LESS, OR AN ADT OF 400 OR LESS.

*A = 20:1 and *B = 12:1 TAPERS:
FOR ROADS WITH SPEEDS GREATER THAN 40 MPH OR AN ADT GREATER THAN 400

TURNOUT WIDTH TABLE
** (SEE NOTE NO. 2)*

SPEED/ADT	PREFERRED	MINIMUM
55/>10000	>12'	12'
55/1500–10000	12'	10'
55/100–1500	10'	8'
55/<100	8'	8'
<40/<50	8'	8'

1. WHEN USING THE TURNOUT WIDTH TABLE THE "SPEED" (MPH) IS THE MAXIMUM POSTED ROADWAY SPEED. THE "ADT" IS THE AVERAGE DAILY TRAFFIC.

2. THE BALLAST REQUIREMENTS OF MAILBOX TURNOUTS SHALL BE AS THE ADJACENT ROADWAY SECTION.

3. REFER TO THE UNITED STATES POST OFFICE STANDARDS FOR MAILBOX INSTALLATION.

MAILBOX TURNOUT DETAIL

N.T.S.

DATE:	JANUARY 2008	MAILBOX DETAILS
DESIGNED BY:	RJLE	INDEPENDENT HIGHWAY DISTRICT BONNER COUNTY, IDAHO
FILE:	SD–14.DWG	
SHEET:	SD–14	

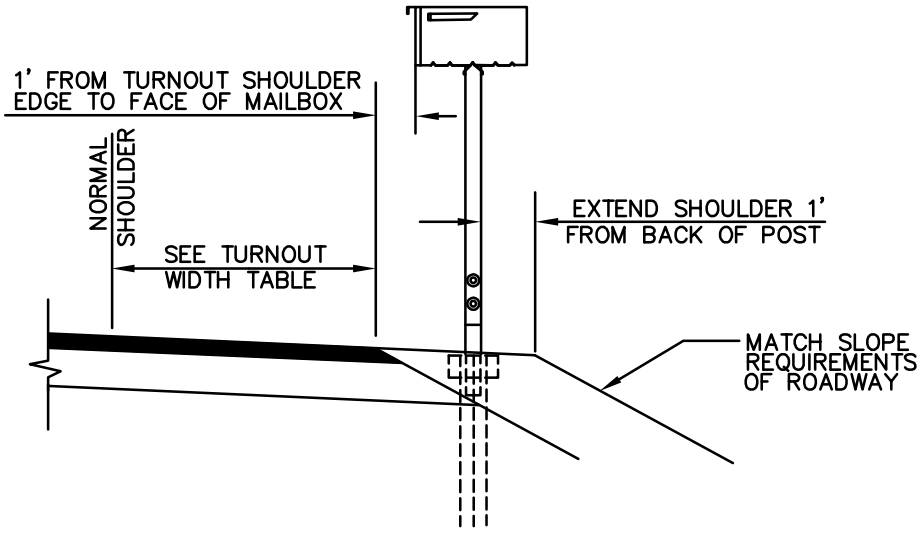

MAILBOX SLOPE TYPICAL

N.T.S.

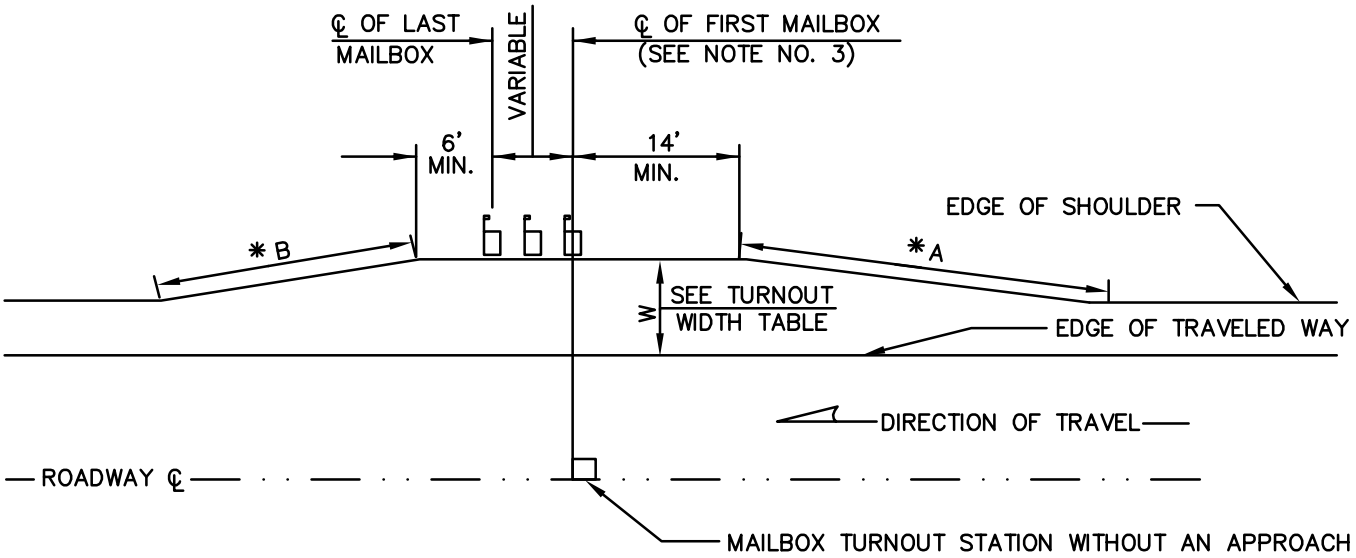

*A = 4:1 and *B + 2.5:1 TAPERS:
FOR ROADS WITH SPEEDS OF 40 MPH OR LESS, OR AN ADT OF 400 OR LESS.

*A = 20:1 and *B = 12:1 TAPERS:
FOR ROADS WITH SPEEDS GREATER THAN 40 MPH OR AN ADT GREATER THAN 400

TURNOUT WIDTH TABLE
** (SEE NOTE NO. 2)*

SPEED/ADT	PREFERRED	MINIMUM
55/>10000	>12'	12'
55/1500–10000	12'	10'
55/100–1500	10'	8'
55/<100	8'	8'
<40/<50	8'	8'

1. WHEN USING THE TURNOUT WIDTH TABLE THE "SPEED" (MPH) IS THE MAXIMUM POSTED ROADWAY SPEED. THE "ADT" IS THE AVERAGE DAILY TRAFFIC.

2. THE BALLAST REQUIREMENTS OF MAILBOX TURNOUTS SHALL BE AS THE ADJACENT ROADWAY SECTION.

3. REFER TO THE UNITED STATES POST OFFICE STANDARDS FOR MAILBOX INSTALLATION.

MAILBOX TURNOUT DETAIL

N.T.S.

DATE:	JANUARY 2008	MAILBOX DETAILS
DESIGNED BY:	RJLE	INDEPENDENT HIGHWAY DISTRICT BONNER COUNTY, IDAHO
FILE:	SD–14.DWG	
SHEET:	SD–14	

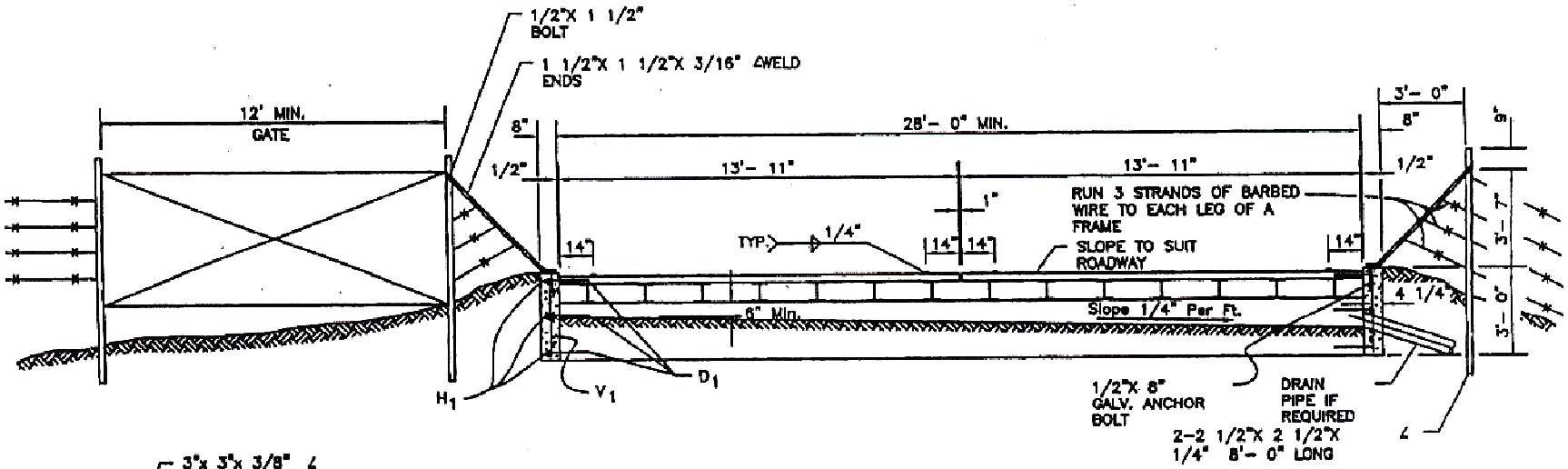

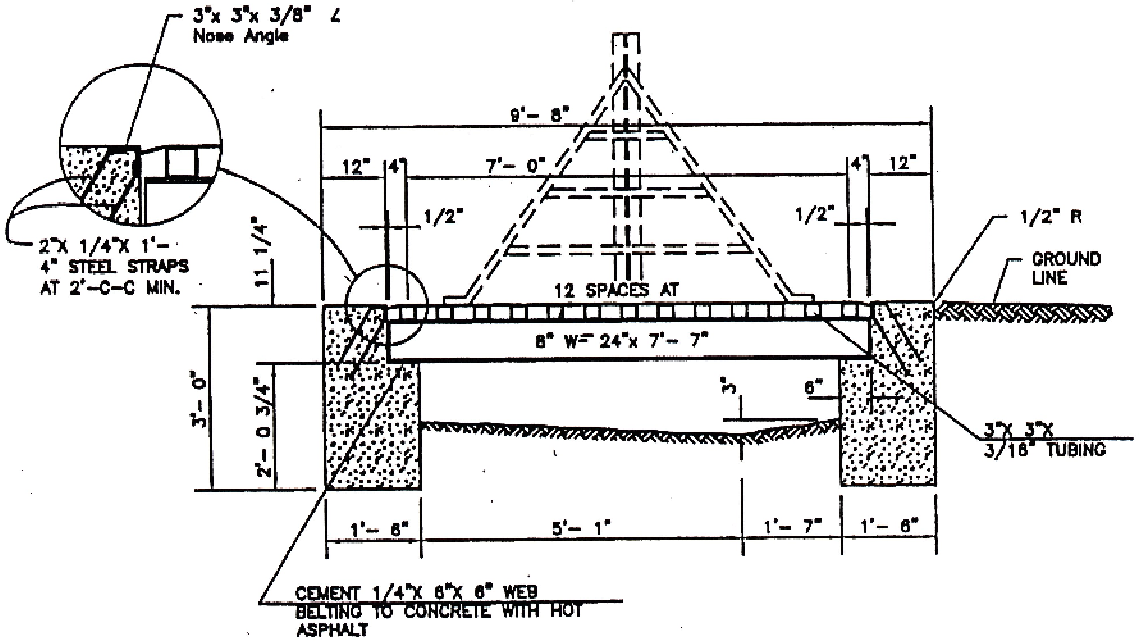

REINFORCEMENT STEEL				
MARK	LOCATION	SIZE NO.	TOTAL LENGTH	NO. REQ'D
V_1	END WALLS	4	2'- 8"	18
H_1	END WALLS	6	9'- 4"	6
D_1	DOWELS	4	1'- 4"	24
80 L.F. NO. 4 BARS AT .668 LB./FT.= 53 LB.				
58 L.F. NO. 6 BARS AT 1.502 LB./FT.= 85 LB.				

CATTLE GUARD

N.T.S.

DATE:	JANUARY 2008
DESIGNED BY:	RJLE
FILE:	SD-13.DWG
SHEET:	SD-13

CATTLE GUARD

INDEPENDENT HIGHWAY DISTRICT

BONNER COUNTY, IDAHO

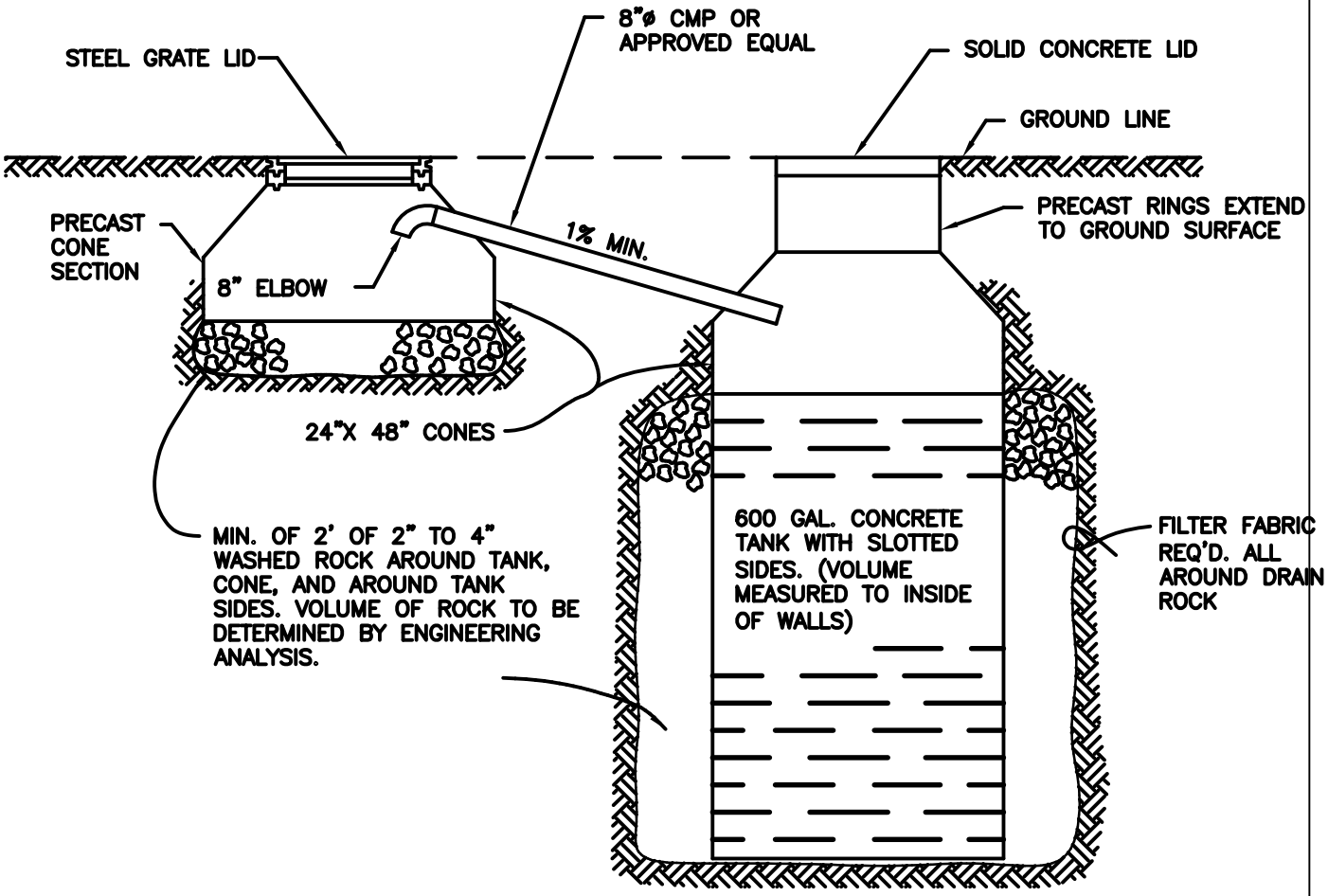

CATCH BASIN & DRYWELL INSTALLATION

N.T.S.

DATE:	JANUARY 2008	CATCH BASIN AND DRYWELL INSTALLATION
DESIGNED BY:	RJLE	INDEPENDENT HIGHWAY DISTRICT BONNER COUNTY, IDAHO
FILE:	SD-12.DWG	
SHEET:	SD-13	

NOTE:
FOR CONTROLLED INTERSECTIONS SIGHT DISTANCE MUST BE ADEQUATE TO PROVIDE A STOPPING SIGHT DISTANCE IN ACCORDANCE WITH THESE STANDARDS.

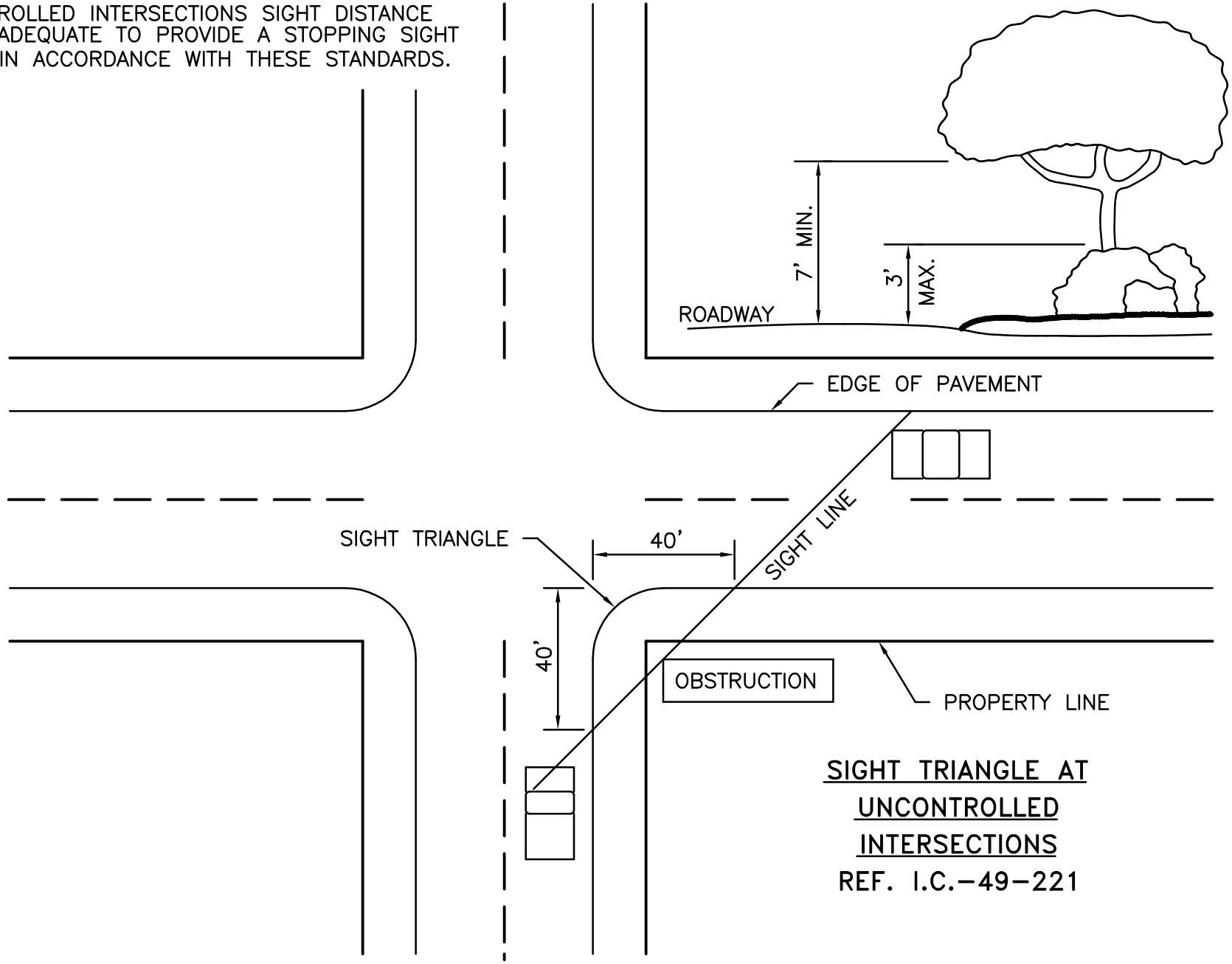

SIGHT TRIANGLE AT UNCONTROLLED INTERSECTIONS

REF. I.C.–49–221

DATE:	JANUARY 2008
DESIGNED BY:	RJLE
FILE:	SD–11.DWG
SHEET:	SD–11

SIGHT TRIANGLE DETAIL

INDEPENDENT HIGHWAY DISTRICT
BONNER COUNTY, IDAHO

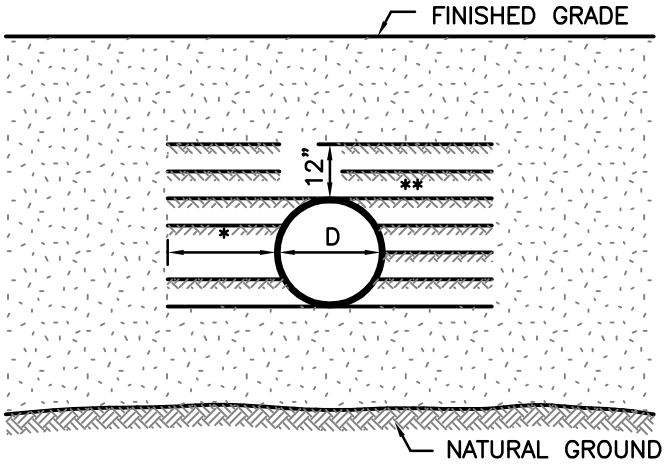

ABOVE NATURAL GROUND

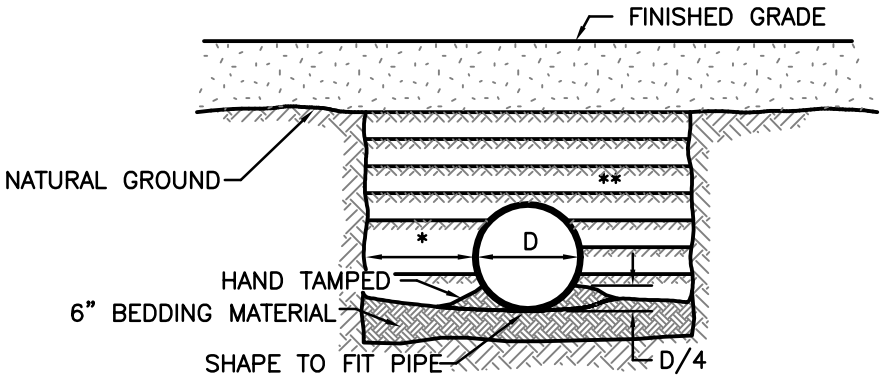

BELOW NATURAL GROUND

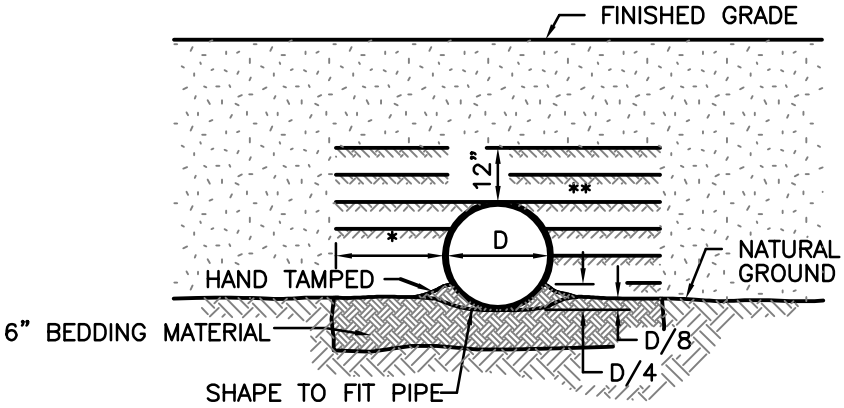

ON NATURAL GROUND

NOTE: * D OR 12" WHICHEVER IS GREATER

** MECHANICAL COMPACTED BACKFILL. PLACE IN 6" LAYERS. THE DISTRICT MAY REQUIRE THIS MATERIAL TO BE BASE MATERIAL CONFORMING TO SUB-SECTION 404.01.

DATE:	JANUARY 2008	TYPICAL CULVERT INSTALLATION
DESIGNED BY:	RJLE	INDEPENDENT HIGHWAY DISTRICT BONNER COUNTY, IDAHO
FILE:	SD-10.DWG	
SHEET:	SD-10	

NOTE:

1. SLOPE STAKES REQUIRED ON 50' INTERVALS THROUGH TANGENTS AND 25' INTERVALS THROUGH CURVES.
2. REFERENCE STAKES REQUIRED ON 100' INTERVALS.
3. STAKING SHOWN FOR 12" BALLAST, 4" CRUSHED BASE AND 2" SURFACING.

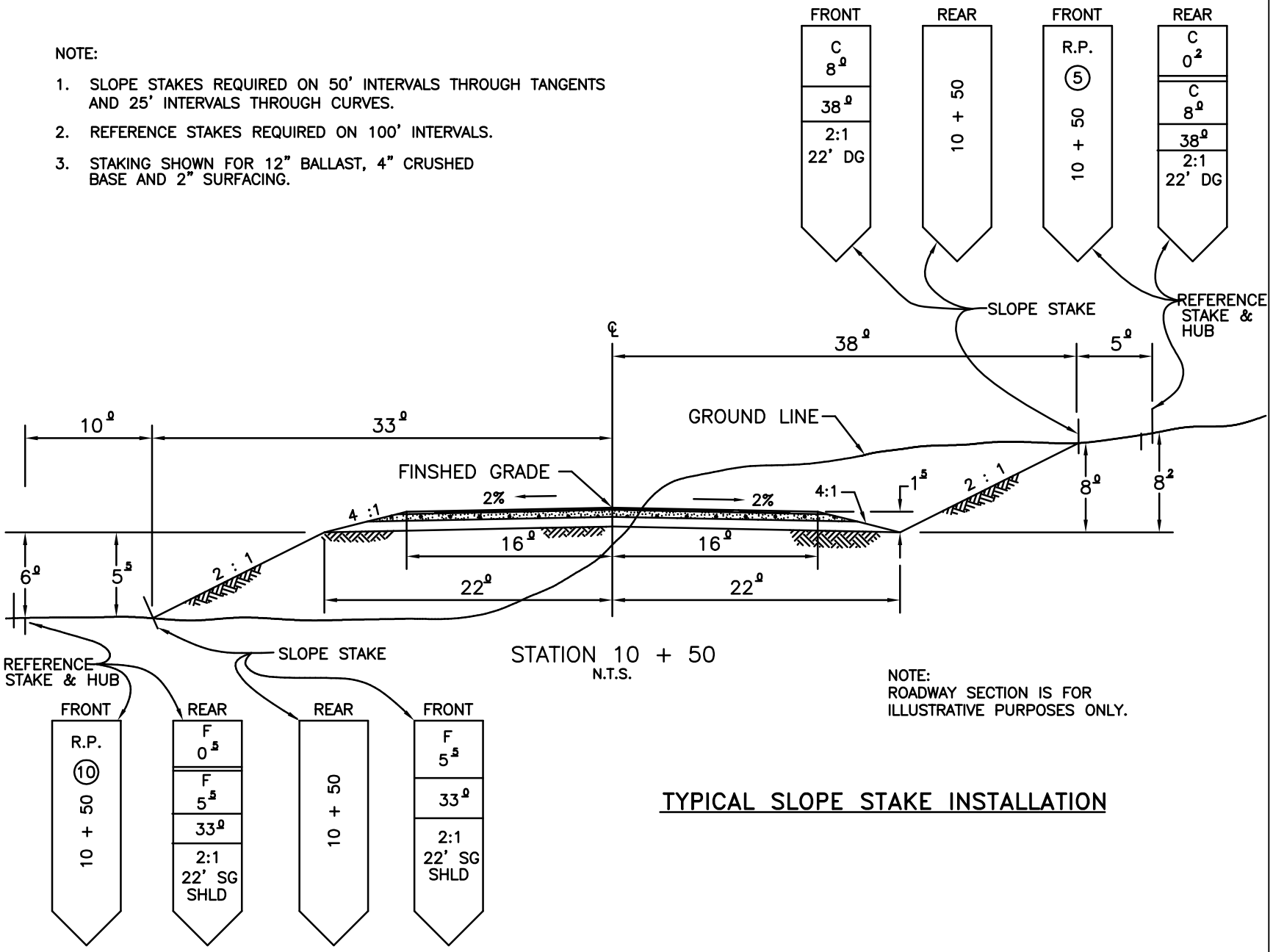

STATION 10 + 50
N.T.S.

NOTE:
ROADWAY SECTION IS FOR ILLUSTRATIVE PURPOSES ONLY.

TYPICAL SLOPE STAKE INSTALLATION

DATE:	JANUARY 2008
DESIGNED BY:	RJLE
FILE:	SD-9.DWG
SHEET:	SD-9

TYPICAL SLOPE STAKE INSTALLATION

INDEPENDENT HIGHWAY DISTRICT
BONNER COUNTY, IDAHO

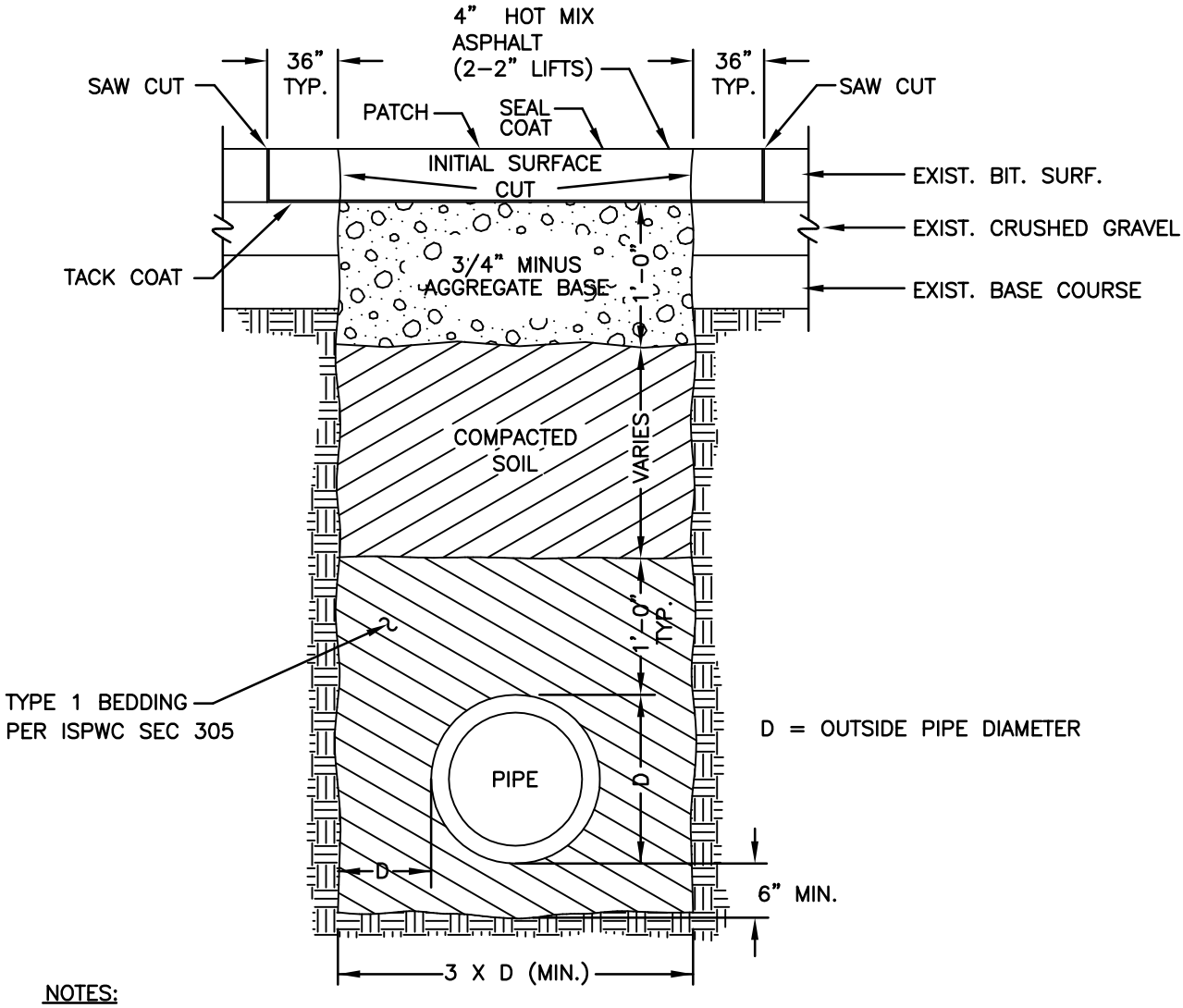

NOTES:

1. MAIN CONTRACTOR IS RESPONSIBLE FOR PLACING BASE ROCK.
2. ALL LOOSE AND FOREIGN MATERIALS SHALL BE REMOVED FORM THE FACE OF THE EXISTING BITUMINOUS SURFACE-CUT.
3. ANY FRACTURED BITUMINOUS SURFACE BEYOND THE FACE OF THE SURFACE-CUT SHALL BE REMOVED.
4. THE FACE OF THE BITUMINOUS SURFACE-CUT MUST BE PRIMED BEFORE APPLYING PATCH.
5. PATCH SHALL NOT OVERLAP THE EXISTING BITUMINOUS SURFACE.
6. THE PATCH THICKNESS SHALL BE 4" OR EQUAL TO THE EXISTING ASPHALT THICKNESS WHICHEVER IS GREATER.
7. PATCH SURFACE SHALL BE OF COMPACTED HOT MIX ASPHALT.
8. PATCH TO BE CHIP-SEALED.
9. COMPACTION TO BE 95% OF MODIFIED PROCTOR DENSITY.

DATE:	JANUARY 2008	UTILITY TRENCHING DETAIL
DESIGNED BY:	RJLE	INDEPENDENT HIGHWAY DISTRICT BONNER COUNTY, IDAHO
FILE:	SD-8.DWG	
SHEET:	SD-8	

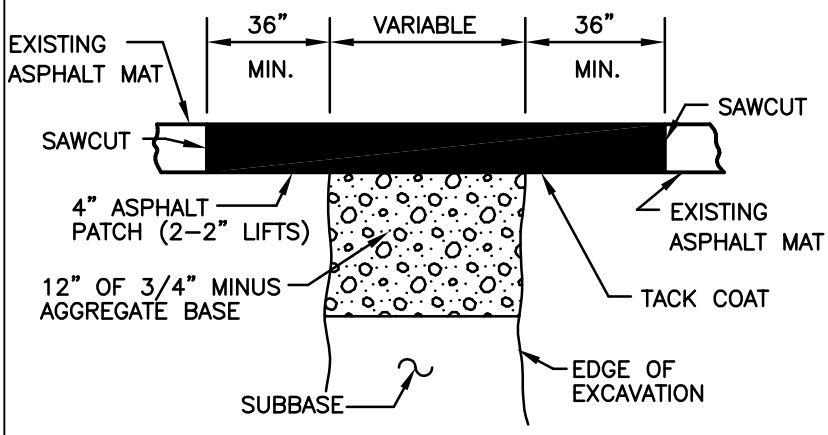

PAVED SURFACE

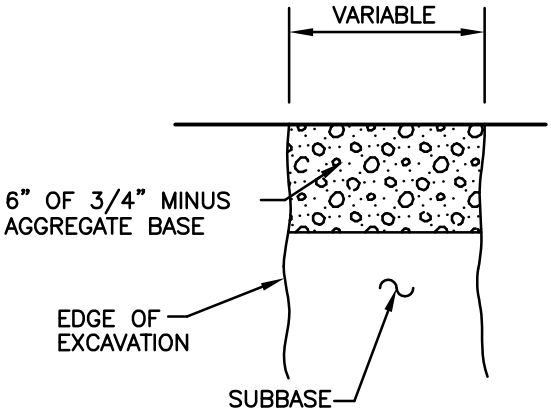

GRAVEL SURFACE

NOTES:

1. BACKFILL AT SUBGRADE SHALL NOT SHOW VISIBLE DEFLECTION UNDER 4,000 LB. WHEEL LOAD.
2. WHERE 50% OR MORE OF THE SURFACE AREA OF PAVEMENT HAS BEEN REMOVED OR DAMAGED, FULL WIDTH RESTORATION SHALL BE REQUIRED. ANY STRIP OF REMAINING PAVEMENT LESS THAN TWO FEET IN WIDTH ALONG CURB AND GUTTER OR PAVEMENT EDGE SHALL BE REMOVED AND REPLACED.
3. WHERE STREET SURFACING HAS BEEN IN SERVICE THREE YEARS OR LESS, THE CONTRACTOR MUST BORE CROSSINGS. STREET CUTS PARALLEL TO CENTERLINE MUST BE APPROVED BY THE HIGHWAY DISTRICT AND WILL REQUIRE RESURFACING USING A PAVING MACHINE. CROSSINGS OF MAJOR COLLECTOR STREETS AND ARTERIALS MAY REQUIRE BORING AT THE DIRECTION OF THE HIGHWAY DISTRICT.
4. STREET SURFACING SHALL BE TACKED TO A NEAT STRAIGHT LINE WITH THE EDGES FREE OF DUST, MOISTURE OR LOOSE MATERIAL.
5. ALL COLD JOINT SURFACES SHALL BE TACKED WITH EMULSION WHICH SHALL HAVE "BROKEN" PRIOR TO PATCHING.
6. MATERIALS AND CONSTRUCTION OF STRUCTURAL REPAIR SHALL CONFORM TO HIGHWAY DISTRICT SPECIFICATIONS.
7. COMPLETED PATCH SHALL NOT DEVIATE FROM EXISTING SURFACE MORE THAT 1/4" /10 FT. IN PROFILE OR 1/2" / 10 FT. IN CROSS-SECTION WHEN MEASURED WITH A 10 FT. STRAIGHT EDGE.
8. COMPLETED PATCH SHALL NOT POND WATER.
9. CONTRACTOR SHALL BE RESPONSIBLE FOR MAINTENANCE OF STREET REPAIR FOR TWO YEARS AFTER INSTALLATION.
10. ALL MATERIAL TO BE COMPACTED TO AT LEAST 95% OF OPTIMUM DENSITY PER APPROPRIATE AASHTO STANDARD PROCTOR TEST RESULT.

DATE:	JANUARY 2008	PAVEMENT REPAIRS
DESIGNED BY:	RJLE	INDEPENDENT HIGHWAY DISTRICT BONNER COUNTY, IDAHO
FILE:	SD-7.DWG	
SHEET:	SD-7	

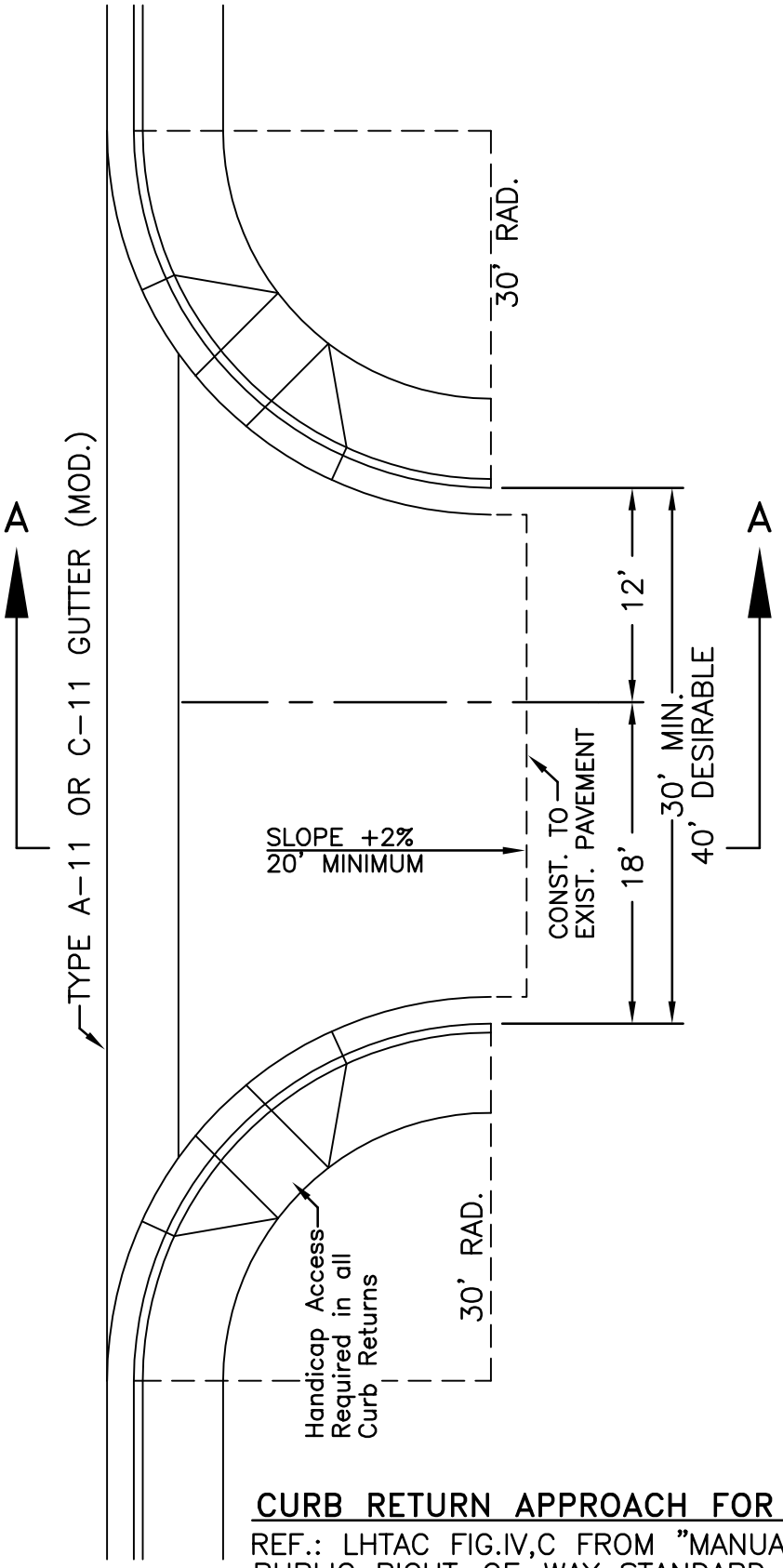

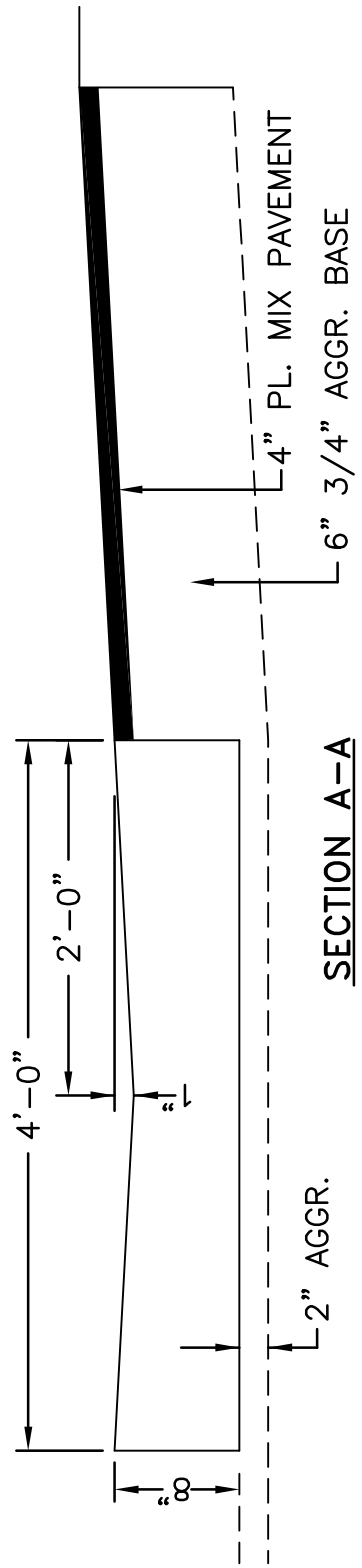

CURB RETURN APPROACH FOR TRUCK TRAFFIC

REF.: LHTAC FIG.IV,C FROM "MANUAL FOR USE OF PUBLIC RIGHT-OF-WAY STANDARD APPROACH POLICY"

DATE: JANUARY 2008	CURB RETURN APPROACH FOR TRUCK TRAFFIC
DESIGNED BY: RJLE	INDEPENDENT HIGHWAY DISTRICT BONNER COUNTY, IDAHO
FILE: SD-6.DWG	
SHEET: SD-6	

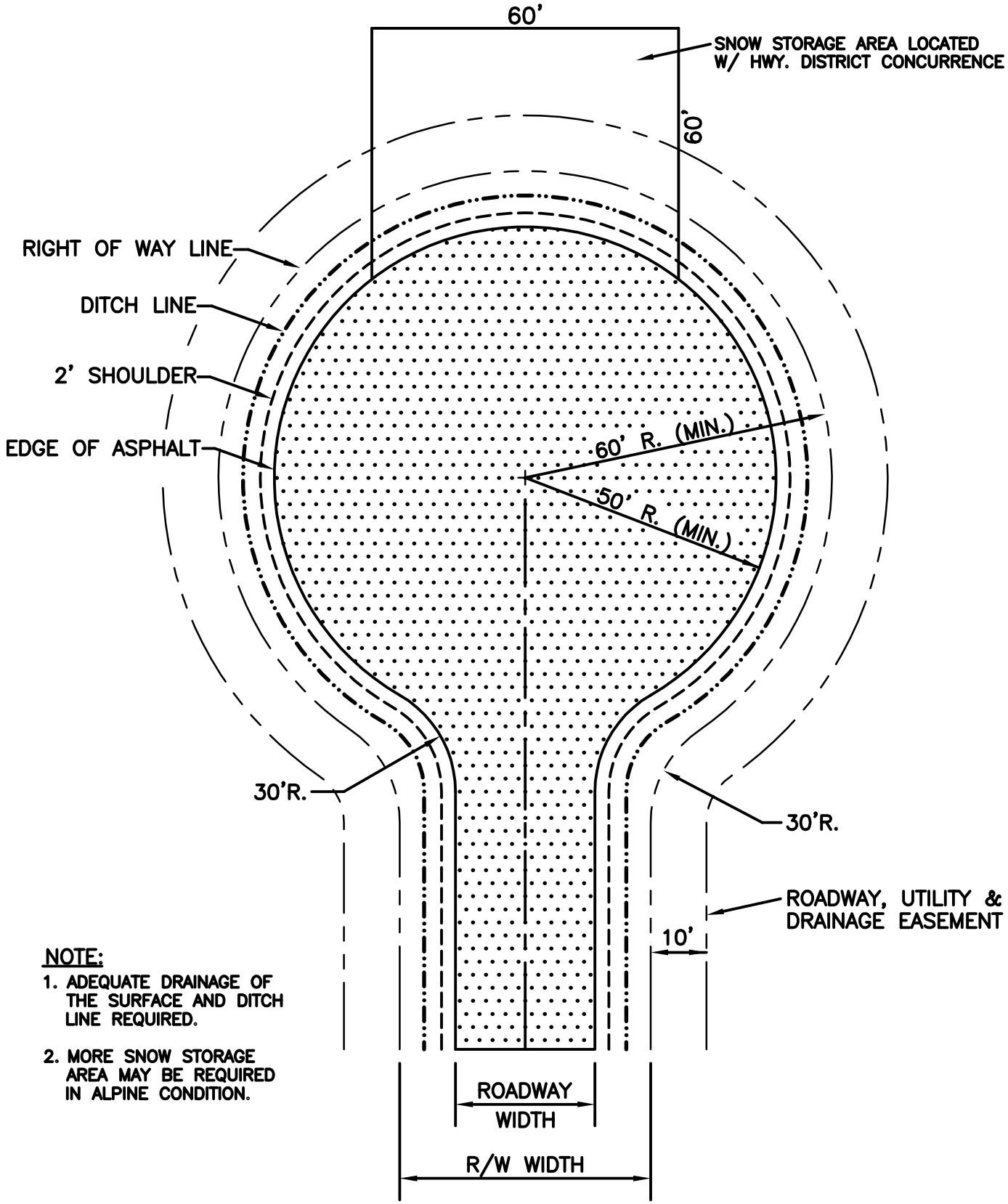

NOTE:

1. ADEQUATE DRAINAGE OF THE SURFACE AND DITCH LINE REQUIRED.
2. MORE SNOW STORAGE AREA MAY BE REQUIRED IN ALPINE CONDITION.

DATE:	JANUARY 2008	STANDARD CUL-DE-SAC LAYOUT
DESIGNED BY:	RJLE	INDEPENDENT HIGHWAY DISTRICT BONNER COUNTY, IDAHO
FILE:	SD-5.DWG	
SHEET:	SD-5	

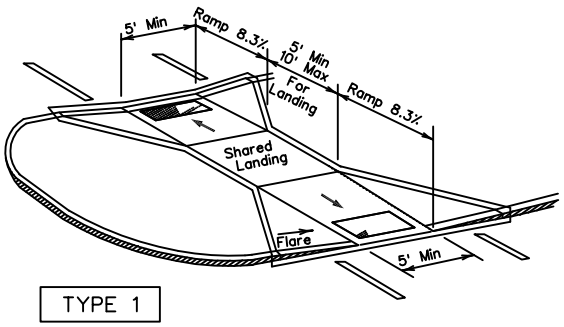

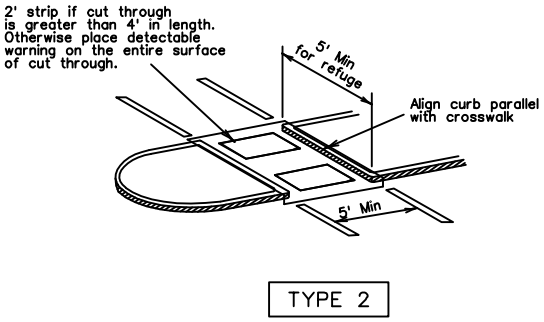

CURB RAMPS AT MEDIAN ISLANDS

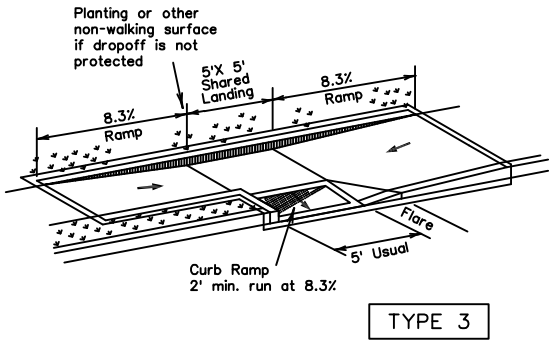

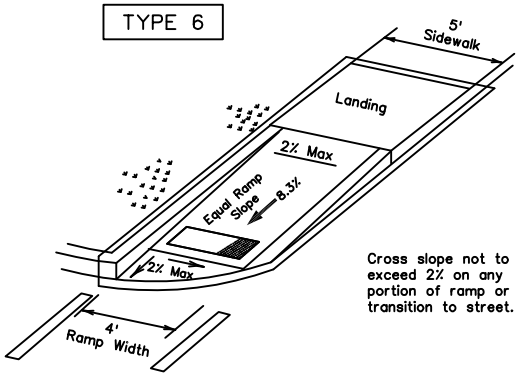

DIRECTIONAL RAMP WITHIN RADIUS
(Sidewalk adjacent to curb)

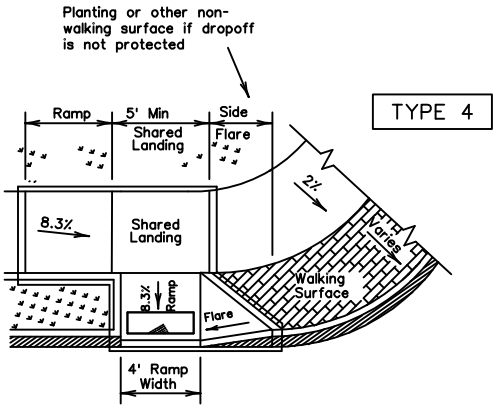

COMBINATION CURB RAMPS

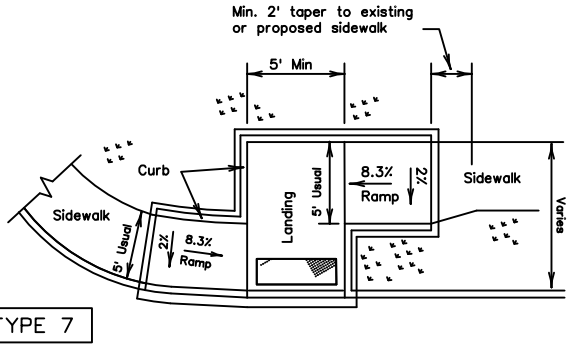

OFFSET PARALLEL CURB RAMP

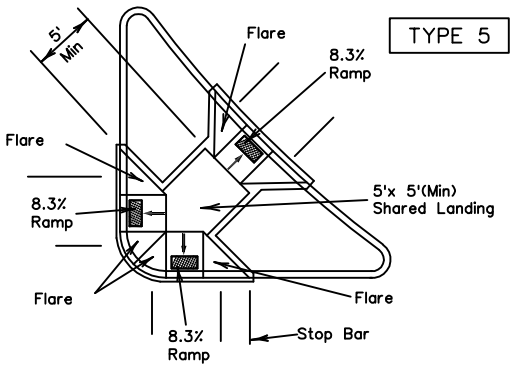

COMBINATION ISLAND RAMPS

DATE:	JANUARY 2008	STANDARD PEDESTRIAN CURB DROP
DESIGNED BY:	RJLE	INDEPENDENT HIGHWAY DISTRICT BONNER COUNTY, IDAHO
FILE:	SD-4.DWG	
SHEET:	SD-4	

Dear Building Contractor and/or Owner:

Both Bonner County Building & Planning and the Independent Highway District have minimum requirements for access roadways and driveways to residential properties. The Independent Highway District's requirements are set forth in this letter. Failure to comply with these regulations has caused a multitude of problems for residents and the IHD. This letter is provided to you as part of a continuing effort by the IHD to improve the safety and integrity of roadways in the IHD.

In and effort to avoid future problems, the IHD will be performing a thorough review before signing off on Approach Permits for driveways. To perform this review, the IHD will require site information related to the driveway. This IHD's efforts will also be of value to the owner by improving the awareness of the relationship between the Home site, driveway and approach to the roadway.

As a condition of obtaining IHD approval for an approach permit, the IHD will require submission of a site plan for the lot and driveway showing:

1. A 20 foot minimum & a 30' maximum. curve radius on edge of the driveway from the edge of the roadway pavement.

2. A minus 2% driveway slope from the edge of pavement for a distance of at least 20' or to the center of the ditch line, which ever is greater. This Allows surface water from the driveway to drain off into the ditch and not sheet drain onto the roadway.

3. A positive 3% maximum driveway slope from the center of the ditch line to the right-of-way line where the driveway goes uphill from the roadway.

4. The proposed driveway slope from the right-of-way line to the garage or parking pad. 12% max Grades of 10% or greater shall not exceed one hundred(100) feet in length.

5. A sectional drawing of the driveway within the IHD right-of-way showing driveway width, ditch section, maximum slopes for grading, maximum slope heights and erosion control measures to be used on the slopes. The driveway standard for the IHD within the IHD's right-of-way is a width of at least 12 feet but no greater than 30'.

6. A site plan showing the location of the house and garage and/or parking pad with dimensions from side, front and rear lot lines.

For a list of associated fees, other development issues or if you have any other further questions, please don't hesitate to contact Jackie at The IHD at 208-263-8131.

DATE: JANUARY 2008	REQUIREMENT LETTER
DESIGNED BY: RJLE	INDEPENDENT HIGHWAY DISTRICT BONNER COUNTY, IDAHO
FILE: SD-3B.DWG	
SHEET: SD-3B	

MINIMUM STOPPING SIGHT DISTANCES

DESIGN SPEED MPH	20	25	30	35	40	50	60
STOPPING DISTANCE, (S) FEET	115	155	200	250	305	425	570
K VALUE FOR;							
CREST VERTICAL CURVE	7	12	19	29	44	84	151
SAG VERTICAL CURVE	17	26	37	49	64	96	136

*C.M.P. CULVERT
MIN. 18" DIAMETER
MIN. 40' LENGTH

**10' FROM EDGE OF ROADWAY
TO DRIVER'S EYE POSITION
@ 3.50 FT. ABOVE ROAD

***OBJECT HEIGHT @ 0.50 FT.
PER AASHTO 2004 MANUAL

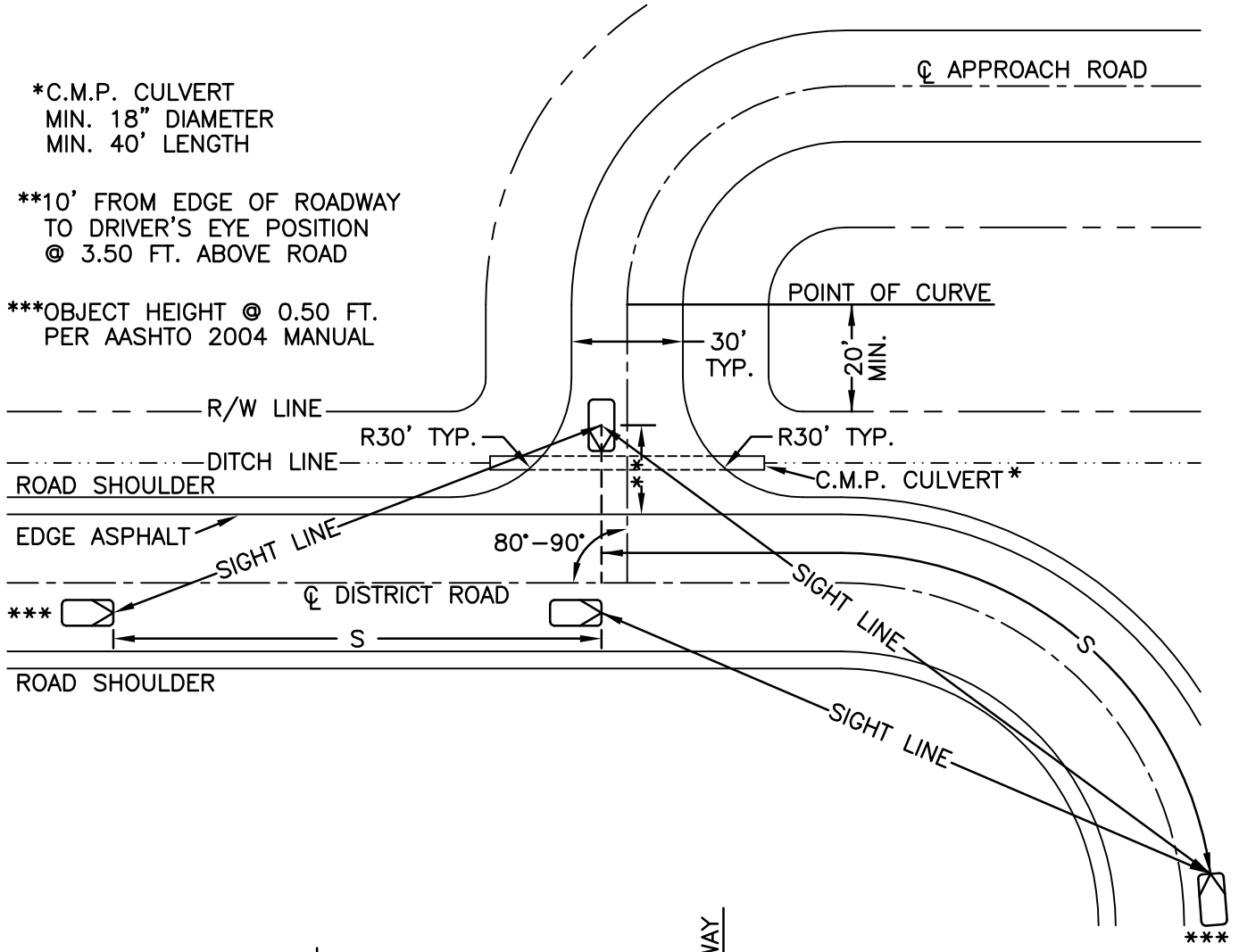

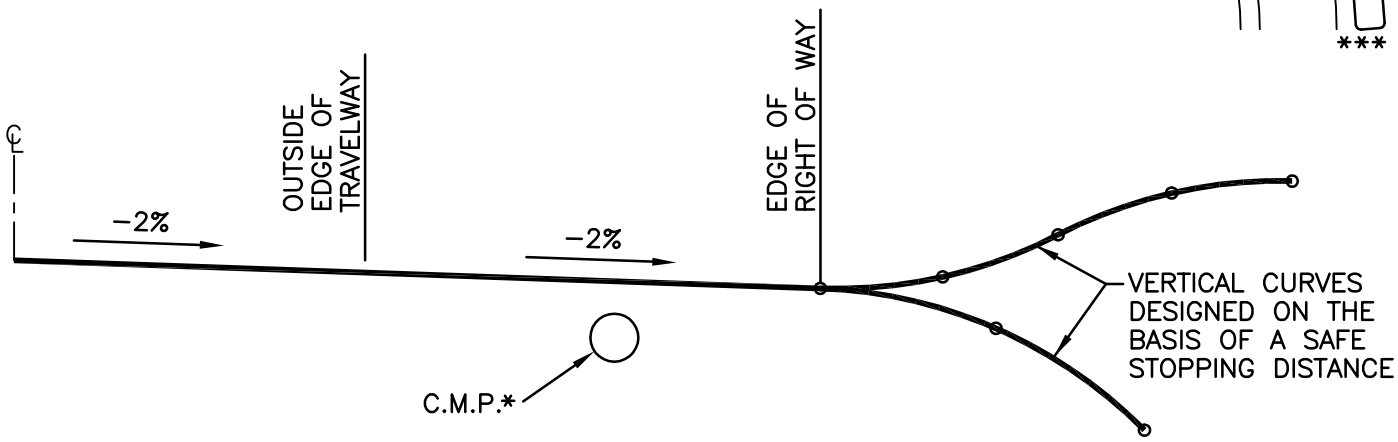

DATE: JANUARY 2008	STANDARD APPROACH LAYOUT
DESIGNED BY: RJLE	INDEPENDENT HIGHWAY DISTRICT BONNER COUNTY, IDAHO
FILE: SD–3A.DWG	
SHEET: SD–3A	