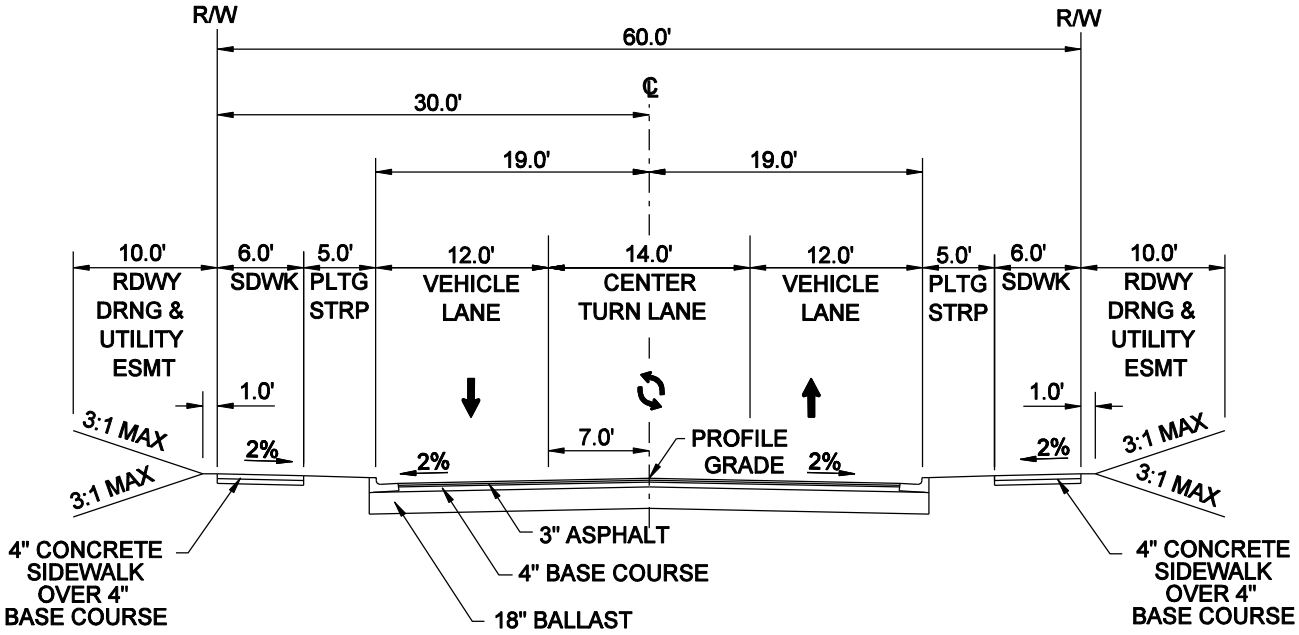


COLLECTOR 3

NOTE:

1. A RAISED MEDIAN WITH A 2' SHY DISTANCE AT TRAVEL LANES MAY REPLACE THE CENTER TURN LANE AT THE AGENCY'S DISCRETION.

2. CONCRETE SIDEWALK SECTION AT DRIVEWAYS SHALL BE 6" REINFORCED CONCRETE OVER 6" BASE COURSE.

3. INSTALL CURB ACCORDING TO TYPICAL SECTION ON PG 29.

NOT TO SCALE

| | |
|---|---|
| DATE: | NOVEMBER 2007 |
| DESIGNED BY: | JECL |
| CHECKED BY: | RJLE |
| FILE: | 07-COLLECTOR3.DGN |
| SHEET: | 12 OF 29 |

TYPICAL SECTION

COLLECTOR 3
COLLECTOR STREET
TYPICAL SECTION

SANDPOINT URBAN AREA

DAVID EVANS ASSOCIATES INC.